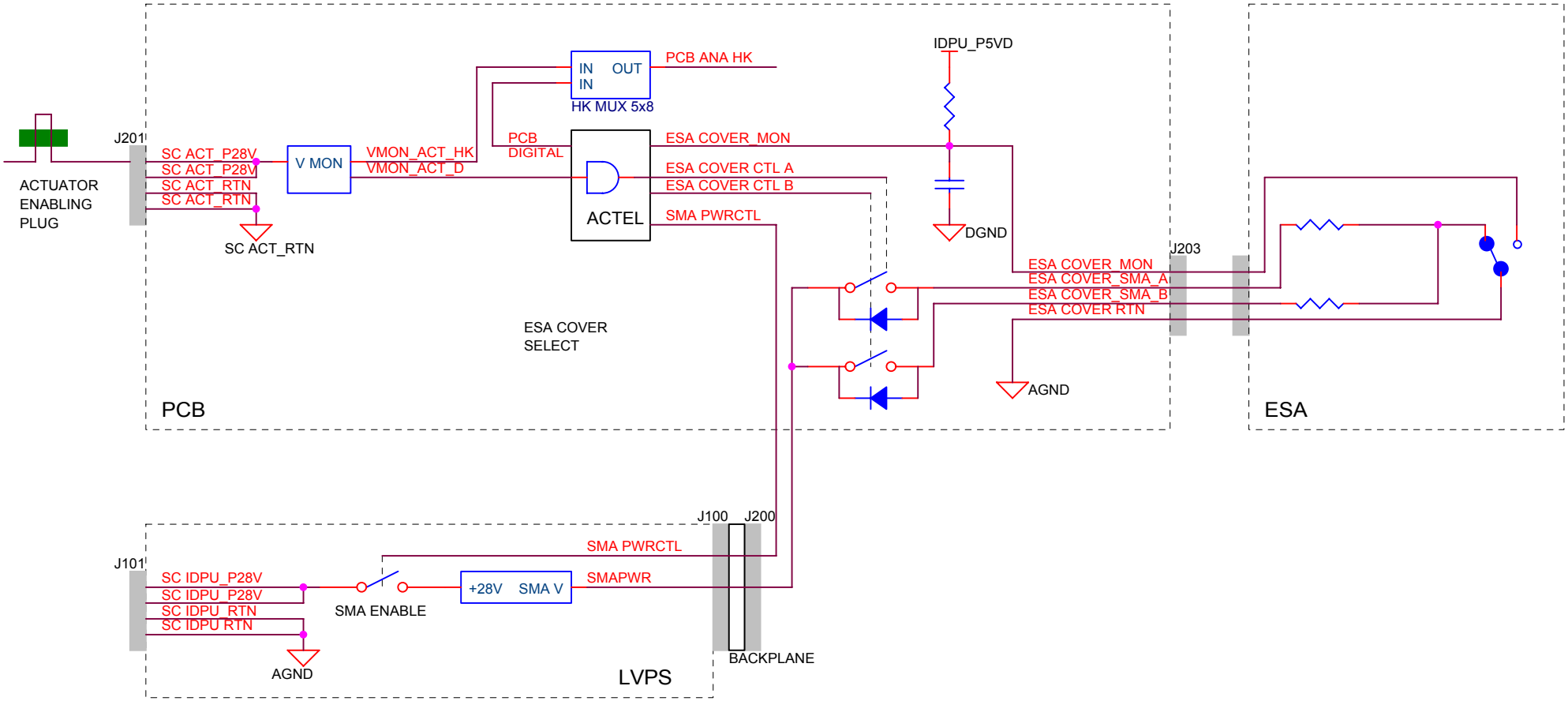

NOTES:

Title	ESA ACTUATOR DIAGRAM	
Size	Document Number THM-SYS-207	Rev B
Date: Wednesday, March 17, 2004	Sheet 1 of 1	