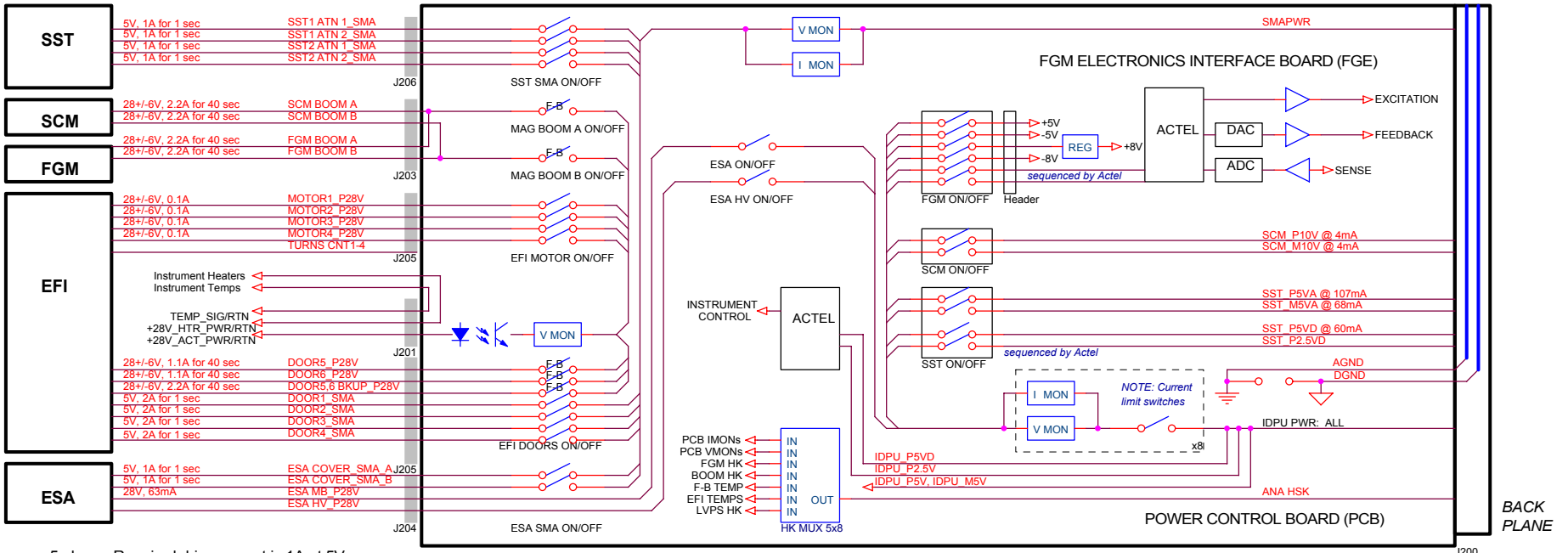

NOTES:

1. SST SMAs: Resistance = 5 ohms. Required drive current is 1A at 5V. Duration is 1 second.

2. Mag Boom Frangibolts: Resistance = 31/2 ohms. FGM and SCM booms are cross-strapped redundant, 2 Frangibolts actuated at the same time. Required drive current is 2.2A at 34V. Duration is 30 to 40 seconds. Test at low voltage 22V.

3. EFI SPB Motors: Average power is 104 - 96mA at 28V. Peak power is 1.1A at 34V.

4. EFI AXB Doors Frangibolts: Resistance = 31 ohms for Door 5, Door 6. Required drive current is 1.1A at 34V. Duration is 30 to 40 seconds. Resistance = 31/2 ohms for Backup Door 5&6. Service goes to both Door 5 and 6, 2 Frangibolts actuated at the same time. Required drive current is 2.2A at 34V. Duration is 30 to 40 seconds.

5. EFI SPB SMAs (Doors 1-4): Resistance = 5/2 ohms. SMA wire is redundant. Required drive current is 2A at 5V. Duration is 1 second.

6. ESA SMAs: Resistance = 5 ohms. Required drive current is 1A at 5V. Duration is 1 second.

F-B Frangibolt Actuator

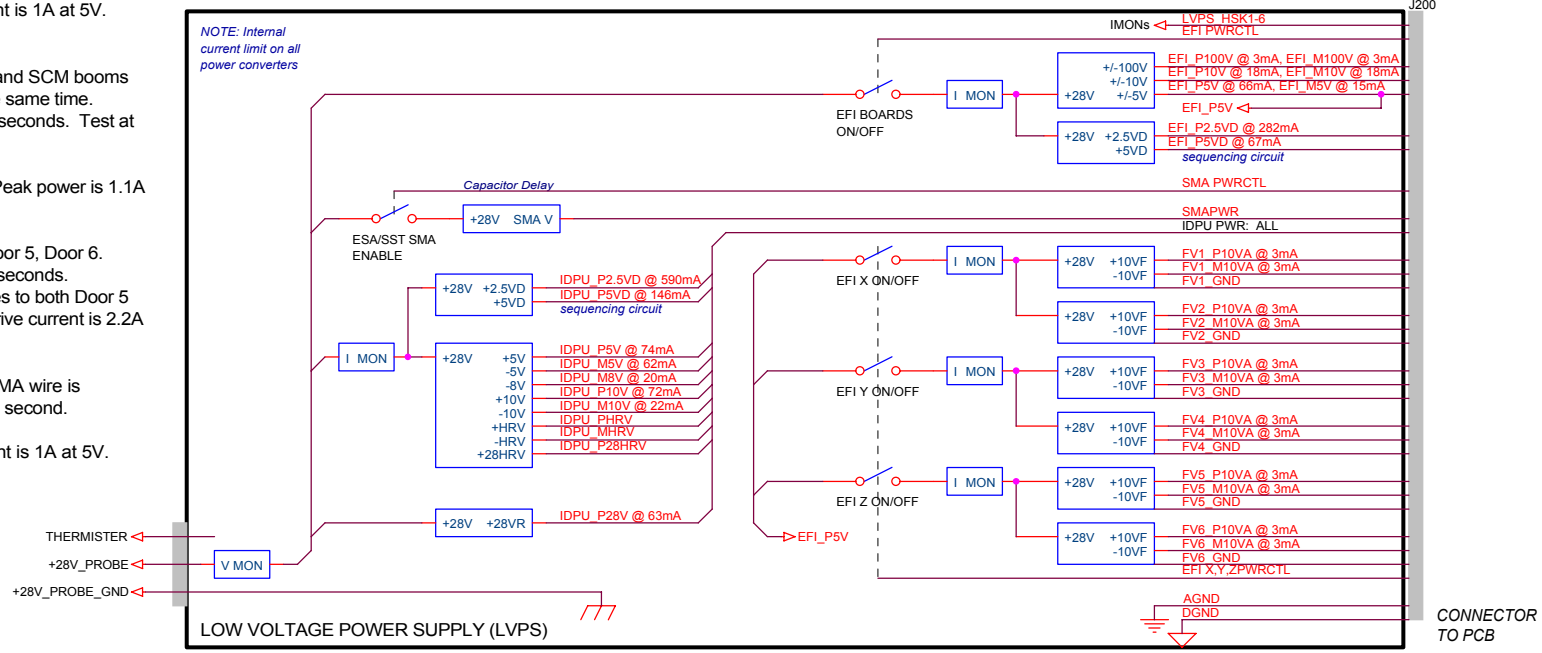

Title	POWER DISTRIBUTION DIAGRAM	E.R.Taylor
Size	Document Number THM-SYS-202	Rev H
Date: Thursday, April 08, 2004	Sheet 1 of 1	