INSTRUMENT DATA PROCESSING UNIT (IDPU)

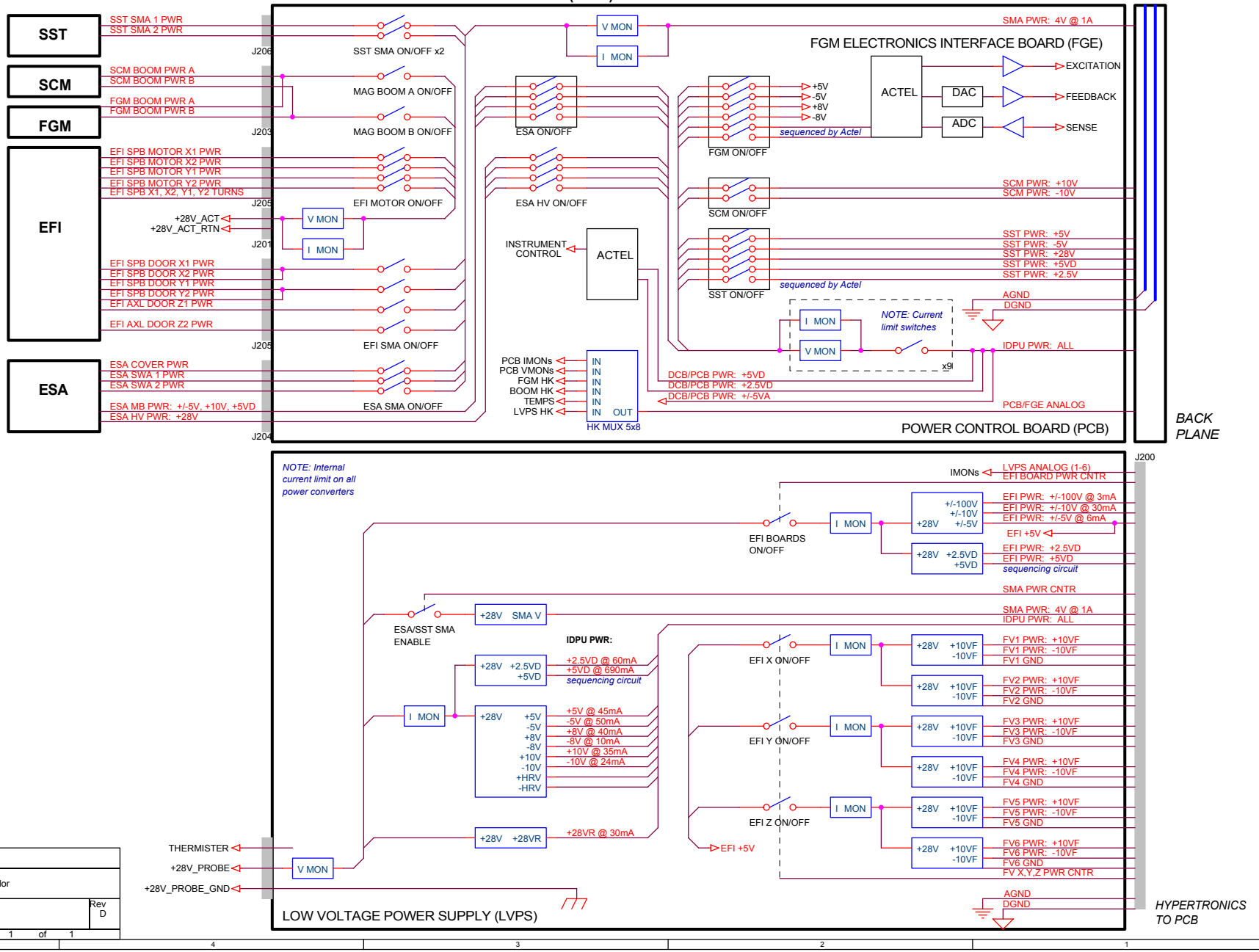

Title	POWER DISTRIBUTION DIAGRAM E.R.Taylor	
Size	Document Number THM-SYS-202	Rev D
Date: Tuesday, October 14, 2003	Sheet 1 of 1	